PURSUIT XL

OWNER'S MANUAL

Pride®
Mobility Products Corp.
www.pridemobility.com

1-800-800-8586 (US) 1-888-570-1113 (Canada)

SAFETY GUIDELINES

WARNING! An authorized Pride Provider or qualified technician must perform the initial setup of this scooter and must perform all of the procedures in this manual.

The symbols below are used throughout this owner's manual and on the scooter to identify warnings and important information. It is very important for you to read them and understand them completely.

WARNING! Indicates a potentially hazardous condition/situation. Failure to follow designated procedures can cause either personal injury, component damage, or malfunction. On the product, this icon is represented as a black symbol on a yellow triangle with a black border.

MANDATORY! These actions should be performed as specified. Failure to perform mandatory actions can cause personal injury and/or equipment damage. On the product, this icon is represented as a white symbol on a blue dot with a white border.

PROHIBITED! These actions are prohibited. These actions should not be performed at any time or in any circumstances. Performing a prohibited action can cause personal injury and/or equipment damage. On the product, this icon is represented as a black symbol with a red circle and a red slash.

Please fill out the following information for quick reference:

Pride Provider:_____

Address:_____

Phone Number:_____

Purchase Date:_____ Serial Number:_____

NOTE: This owner's manual is compiled from the latest specifications and product information available at the time of publication. We reserve the right to make changes as they become necessary. Any changes to our products may cause slight variations between the illustrations and explanations in this manual and the product you have purchased. The latest/current version of this manual is available on our website.

CE

ACN **088 609 661**

Copyright © 2010
Pride Mobility Products Corp.
INFMANU4049/Rev B/November 2010

CONTENTS

I. INTRODUCTION 4

II. SAFETY 5

III. YOUR SCOOTER 19

IV. BATTERIES AND CHARGING 24

V. OPERATION 30

VI. COMFORT ADJUSTMENTS 32

VII. BASIC TROUBLESHOOTING 34

VIII. CARE AND MAINTENANCE 36

IX. WARRANTY 40

APPENDIX I - SPECIFICATIONS 42

I. INTRODUCTION

SAFETY

Welcome to Pride Mobility Products (Pride). The product you have purchased combines state-of-the-art components with **safety**, comfort, and styling in mind. We are confident the design features will provide you with the conveniences you expect during your daily activities. Understanding how to **safely** operate and care for this product should bring you years of trouble free operations and service.

Read and follow all instructions, warnings, and notes in this manual and all other accompanying literature before attempting to operate this product for the first time. In addition, your **safety** depends upon you, as well as your provider, caregiver, or healthcare professional in using good judgment.

If there is any information in this manual which you do not understand, or if you require additional assistance for setup or operation, please contact your authorized Pride Provider. **Failure to follow the instructions, warnings, and notes in this manual and those located on your Pride product can result in personal injury or product damage and will void Pride's product warranty.**

PURCHASER'S AGREEMENT

By accepting delivery of this product, you promise that you will not change, alter, or modify this product or remove or render inoperable or unsafe any guards, shields, or other safety features of this product; fail, refuse, or neglect to install any retrofit kits from time to time provided by Pride to enhance or preserve the safe use of this product.

SHIPPING AND DELIVERY

Before using your scooter, make sure your delivery is complete as some components may be individually packaged. If you do not receive a complete delivery, please contact your authorized Pride Provider immediately. Where damage has occurred during transport, either to the packaging or content, please contact the delivery company responsible.

INFORMATION EXCHANGE

We want to hear your questions, comments, and suggestions about this manual. We would also like to hear about the safety and reliability of your new scooter, and about the service you received from your authorized Pride Provider. Please notify us of any change of address, so we can keep you apprised of important information about safety, new products, and new options that can increase your ability to use and enjoy your scooter. Please feel free to contact us at the address below:

USA:
Pride Mobility Products Corporation
Attn.: Customer Care Department
182 Susquehanna Avenue
Exeter, PA 18643-2694
info@pridemobility.com
1-800-424-8205

Canada:
Pride Mobility Products Company
380 Vansickle Road Unit 350
St. Catharines, Ontario L2R 6P7
1-888-570-1113

NOTE: If you ever lose or misplace your product registration card or your copy of this manual, contact us and we will be glad to send you a new one immediately.

II. SAFETY

PRODUCT SAFETY SYMBOLS

The symbols below are used on the scooter to identify warnings, mandatory actions, and prohibited actions. It is very important for you to read and understand them completely.

Pinch/Crush points created during assembly.

Corrosive chemicals contained in battery.

EMI-RFI - This product has been tested and passed at an immunity level of 20 V/m.

Explosive conditions exist!

Read and follow the information in the owner's manual.

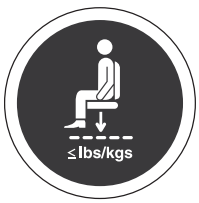

Maximum seating weight.

II. SAFETY

Unlocked and in freewheel mode.

Place unit on level ground and stand to one side when changing from drive mode to freewheel mode or freewheel mode to drive mode.

Locked and in drive mode.

Wear safety goggles.

Use only AGM or Gel-Cell batteries to reduce the risk of leakage or explosive conditions.

Do not use a cell phone, walkie/talkie, laptop, or other radio transmitter while operating.

Avoid exposure to rain, snow, ice, salt, or standing water whenever possible. Maintain and store in a clean and dry condition.

Removal of grounding prong can create electrical hazard. If necessary, properly install an approved 3-pronged adapter to an electrical outlet having 2-pronged plug access.

II. SAFETY

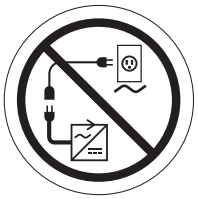

Do not connect an extension cord to the AC/DC converter or the battery charger.

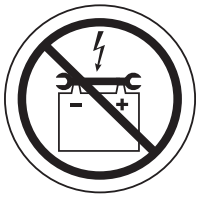

Keep tools and other metal objects away from battery terminals. Contact with tools can cause electrical shock.

Do not allow unsupervised children to play near the scooter while the batteries are charging.

Keep your hands away from the tires when driving. Be aware that loose fitting clothing can become caught in drive tires.

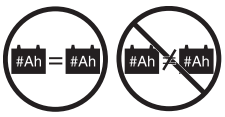

Do not use batteries with different amp-hour (Ah) capacities. Do not mix old and new batteries. Always replace both batteries at the same time.

Do not place the scooter in freewheel mode when on an incline or decline.

Battery charger for indoor use only.

Contains Lead.

II. SAFETY

Disposal and recycling - Contact your authorized Pride Provider for information on proper disposal and recycling of your Pride product and its packaging.

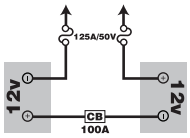

Battery Set Configuration:
+ = Positive (Red) Terminal Post
- = Negative (Black) Terminal Post
Connect Red wires to Red Positive (+) Terminal Posts.
Connect Black wire to Black Negative (-) Terminal Posts.

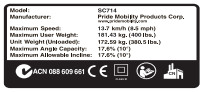

Scooter information label.

Scooter does not conform to ISO 7176-19 for transport of an occupied scooter in a motor vehicle.

Indicates tie-down points on the scooter.

Manufactured in.

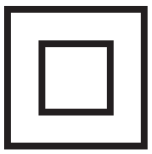

Class II equipment.

II. SAFETY

GENERAL

MANDATORY! Do not operate your new scooter for the first time without completely reading and understanding this owner's manual.

Your scooter is a state-of-the-art life-enhancement device designed to increase mobility. Pride provides an extensive variety of products to best fit the individual needs of the scooter user. Please be aware that the final selection and purchasing decision regarding the type of scooter to be used is the responsibility of the scooter user, who is capable of making such a decision, and his/her healthcare professional (i.e., medical doctor, physical therapist, etc.).

The contents of this manual are based on the expectation that a mobility device expert has properly fitted the scooter to the user and has assisted the prescribing healthcare professional and/or the authorized Pride Provider in the instruction process for the use of the product.

There are certain situations, including some medical conditions, where the scooter user will need to practice operating the scooter in the presence of a trained attendant. A trained attendant can be defined as a family member or care professional specially trained in assisting a scooter user in various daily living activities.

As you begin using your scooter during daily activities, you will probably encounter situations in which you will need some practice. Simply take your time and you will soon be in full and confident control as you maneuver through doorways, on and off elevators, up and down ramps, and over moderate terrain.

Below are some precautions, tips, and other safety considerations that will help you become accustomed to operating the scooter safely.

MODIFICATIONS

Pride has designed and engineered your scooter to provide maximum mobility and utility. A wide range of accessories is available from Pride to further customize your scooter to better suit your needs and/or preferences. However, under no circumstances should you modify, add, remove, or disable any feature, part, or function of your scooter.

WARNING! Do not modify your scooter in any way not authorized by Pride. Do not use accessories if they have not been tested or approved for Pride products.

REMOVABLE PARTS

WARNING! Do not attempt to lift or move your scooter by any of its removable parts, including the armrests, seat, or shroud.

PRE-RIDE SAFETY CHECK

Get to know the feel of your scooter and its capabilities. Pride recommends that you perform a safety check before each use to make sure your scooter operates smoothly and safely.

II. SAFETY

Perform the following inspections prior to using your scooter:

- Check for proper tire inflation. Maintain but do not exceed the psi/bar/kPa air pressure rating indicated on each tire if equipped with pneumatic tires.
- Check all electrical connections. Make sure they are tight and not corroded.
- Check all harness connections. Make sure they are secured properly.
- Check the brakes.
- Check battery charge.

If you discover a problem, contact your authorized Pride Provider for assistance.

TIRE INFLATION

If your scooter is equipped with pneumatic tires, you should check or have the air pressure checked at least once a week. Proper inflation pressures will prolong the life of your tires and help ensure the smooth operation of your scooter.

WARNING! It is critically important that the psi/bar/kPa air pressure rating indicated on the tire be maintained in pneumatic tires at all times. Do not underinflate or overinflate your tires. Low pressure may result in loss of control, and overinflated tires may burst. Failure to maintain the psi/bar/kPa air pressure rating indicated on the pneumatic tires at all times may result in tire and/or wheel failure.

WARNING! Inflate your scooter tires from a regulated air source with an available pressure gauge. Inflating your tires from an unregulated air source could overinflate them, resulting in a burst tire.

NOTE: If the tire on your scooter lists the psi rating only, use the following conversion formulas to find the bar or kPa rating: bar = psi x 0.06895; kPa = psi x 6.89476.

WEIGHT LIMITATIONS

Your scooter is rated for a maximum weight capacity. Refer to the specifications table for information. Keep in mind that the maximum weight capacity includes the combined weight of the user and any accessories mounted to the scooter.

MANDATORY! Stay within the specified weight capacity for your scooter. Exceeding the weight capacity voids your warranty. Pride will not be held responsible for injuries and/or property damage resulting from failure to observe weight limitations.

WARNING! Do not carry passengers on your scooter. Carrying passengers on your scooter may affect the center of gravity, resulting in a tip or a fall.

INCLINE INFORMATION

More and more buildings have ramps with specified degrees of inclination, designed for easy and safe access. Some ramps may have turning switchbacks (180-degree turns) that require you to have good cornering skills on your scooter.

- Proceed with extreme caution as you approach the downgrade of a ramp or other incline.
- Take wide swings with your scooter around any tight corners. If you do that, the scooter's rear wheels will follow a wide arc, not cut the corner short, and not bump into or get hung up on any railing corners.
- When driving down a ramp, keep the scooter's speed adjustment set to the slowest speed setting to ensure a safely controlled descent.
- Avoid sudden stops and starts.

When climbing an incline, try to keep your scooter moving. If you must stop, start up again slowly, and then accelerate cautiously. When driving down an incline, do so by setting the speed adjustment dial to the slowest setting and driving in the forward direction only. If your scooter starts to move down the incline faster than you anticipated or desired, allow it to come to a complete stop by releasing the throttle control lever. Then push the throttle control lever forward slightly to ensure a safely controlled descent.

WARNING! When on any sort of an incline or decline, never place the scooter in freewheel mode, especially when seated on it or standing next to it.

WARNING! When climbing an incline, do not zigzag or drive at an angle up the face of the incline. Drive your scooter straight up the incline. This greatly reduces the possibility of a tip or a fall. Always exercise extreme caution when negotiating an incline.

WARNING! Do not drive your scooter across the side of an incline or diagonally up or down an incline; do not stop, if possible, while driving up or down an incline.

WARNING! You should not travel up or down a potentially hazardous incline (i.e., areas covered with snow, ice, cut grass, or wet leaves).

WARNING! Even though your scooter is capable of climbing slopes greater than those illustrated in figure 1, do not, under any circumstances, exceed the incline guidelines or any other specifications presented in this manual. Doing so could cause instability in your scooter.

Handicap public access ramps are not subject to government regulation in all countries, and therefore do not necessarily share the same standard percent of slope. Other inclines may be natural or, if man-made, not designed specifically for scooters. **Figure 1** illustrates your scooter's stability and its ability to climb grades under various weight loads and under controlled testing conditions.

These tests were conducted with the scooter's seat in the highest position and adjusted backward on the seat base to its farthest backward position. Use this information as a guideline. Your scooter's ability to travel up inclines is affected by your weight, your scooter's speed, your angle of approach to the incline, and your scooter setup.

WARNING! Any attempt to climb or descend a slope steeper than what is shown in figure 1 may put your scooter in an unstable position and cause it to tip.

WARNING! Never carry an oxygen tank weighing more than 15 lbs. (6.8 kg). Never fill the front or rear basket with contents exceeding 15 lbs. (6.8 kg).

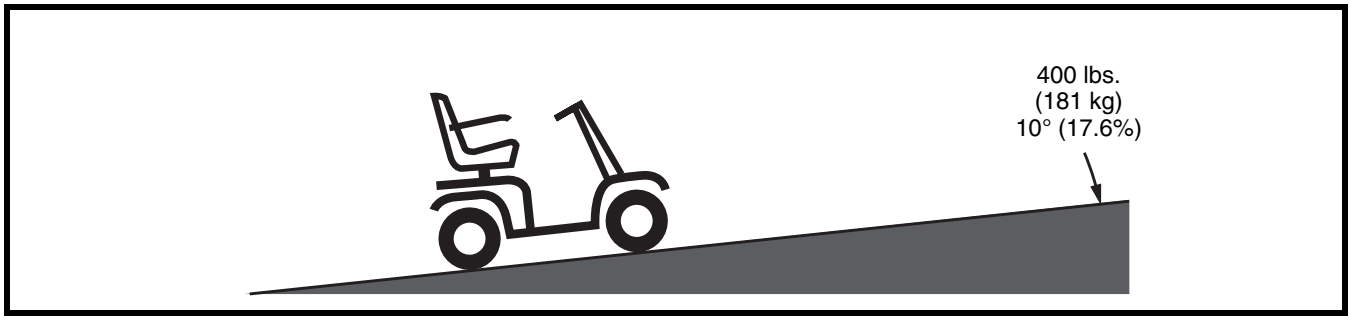

Figure 1. Maximum Recommended Incline Angle

When you approach an incline, it is best to lean forward. **See figures 2 and 2A**. This shifts the center of gravity of you and your scooter toward the front of the scooter for improved stability.

NOTE: When negotiating ramps, if the throttle control lever is released while moving forward, the powered scooter may "roll back" approximately 1 foot (30.48 cm) before the brake engages. If the throttle control lever is released while moving in reverse, the powered scooter may "roll back" approximately 3 feet (1 meter) before the brake engages.

Figure 2. Normal Driving Position

Figure 2A. Increased Stability Driving Position

CORNERING INFORMATION

Excessively high cornering speeds can create the possibility of tipping. Factors which affect the possibility of tipping include, but are not limited to, cornering speed, steering angle (how sharply you are turning), uneven road surfaces, inclined road surfaces, riding from an area of low traction to an area of high traction (such as passing from a grassy area to a paved area – especially at high speed while turning), and abrupt directional changes. High cornering speeds are not recommended. If you feel that you may tip over in a corner, reduce your speed and steering angle (i.e., lessen the sharpness of the turn) to prevent your scooter from tipping.

WARNING! When cornering sharply, reduce your speed and maintain a stable center of gravity. When using your scooter at higher speeds, do not corner sharply. This greatly reduces the possibility of a tip or fall.

BRAKING INFORMATION

Your scooter is equipped with these powerful brake systems:

- Regenerative: Uses electricity to rapidly slow the vehicle when the throttle control lever returns to the center/stop position.
- Disc Park Brake: Activates mechanically after regenerative braking slows the vehicle to near stop, or when power is removed from the system for any reason.
- Handbrake: This lever provides you with emergency stopping power. See III. “Your Scooter.”

II. SAFETY

HANDBRAKE LEVER

The handbrake lever contains hydraulic fluid. When the lever is depressed, the fluid is pushed through the brake line to engage the brake pads against the brake discs. The handbrake lever is a completely sealed unit, meaning that the hydraulic fluid should not leak; however, there are certain safety measures that should be taken if the handbrake lever becomes cracked or damaged.

- Do not touch spilled material unless wearing protective equipment, such as safety goggles and gloves.
- For small spills, cover the material with dry earth, sand, or other non-combustible absorbent material. Once absorbed, enclose the material in a plastic bag and contact your local waste disposal agency for proper disposal measures. Do not expose the material to waterways or sewers.
- If the eyes are exposed, check for and remove contact lenses. Flush eyes with cool, clean, low-pressure water while occasionally lifting and lowering the eyelids. Seek medical attention if excessive tearing, redness, or pain persists.
- If the skin is exposed, remove all contaminated clothing. Wipe off excess material and wash exposed skin with soap and water. Seek medical attention if skin appears damaged or if irritation persists. Thoroughly clean contaminated clothing before reuse. Discard contaminated leather goods.
- If ingested, do not induce vomiting or give anything to drink unless directed to by a physician. Never give anything by mouth to a person who is not fully conscious. Seek medical attention immediately.
- If inhaled, move the affected individual to fresh air. If the affected individual is not breathing, immediately begin rescue breathing. If breathing is difficult, 100% humidified oxygen should be administered by a qualified individual. Seek medical attention immediately and keep the affected individual warm and at rest.
- If ignited, use dry chemical, foam, carbon dioxide, or water fog to extinguish.

WARNING! Do not modify the handbrake lever or attempt to replace the hydraulic fluid. If damage occurs, follow the safety information in this section and contact your authorized Pride Provider for handbrake replacement. The hydraulic handbrake should only be serviced or replaced by your authorized Pride Provider.

WARNING! The handbrake contains hydraulic fluid that can cause mild skin, eye, and nasal/bronchial irritation. Do not attempt to adjust or service the handbrake without proper protective equipment such as safety goggles and gloves, and wash hands after handling.

OUTDOOR DRIVING SURFACES

Your scooter is designed to provide optimum stability under normal driving conditions—dry, level surfaces composed of concrete, blacktop, or asphalt. However, Pride recognizes that there will be times when you will encounter other surface types. For this reason, your scooter is designed to perform admirably on packed soil, grass, and gravel. Feel free to use your scooter safely on lawns and in park areas.

- Avoid driving on uneven terrain and/or soft surfaces.
- Avoid tall grass that can become tangled in the running gear.
- Avoid loosely packed gravel and sand.
- Do not use your scooter in fresh or salt water.
- Do not use your scooter at the edge of a stream, lake, or ocean
- If you feel unsure about a driving surface, avoid that surface.

PUBLIC STREETS AND ROADWAYS

WARNING! You should not operate your scooter on public streets and roadways. Be aware that it may be difficult for traffic to see you when you are seated on your scooter. Obey all local pedestrian traffic rules. Wait until your path is clear of traffic, and then proceed with extreme caution.

STATIONARY OBSTACLES (STEPS, CURBS, ETC.)

WARNING! Do not drive near raised surfaces, unprotected ledges, and/or drop-offs (curbs, porches, stairs, etc.).

WARNING! Do not attempt to have your scooter climb or descend an obstacle that is inordinately high.

WARNING! Do not attempt to have your scooter proceed backward down any step, curb, or other obstacle. This may cause the scooter to tip.

WARNING! Be sure your scooter is traveling perpendicular to any curb you may be required to ascend or descend. See figures 3 and 3A.

WARNING! Even though your scooter may be capable of handling greater obstacles, Pride recommends that you do not attempt to negotiate a curb that has a height greater than 2 in. (5 cm). Doing so could cause instability in your scooter.

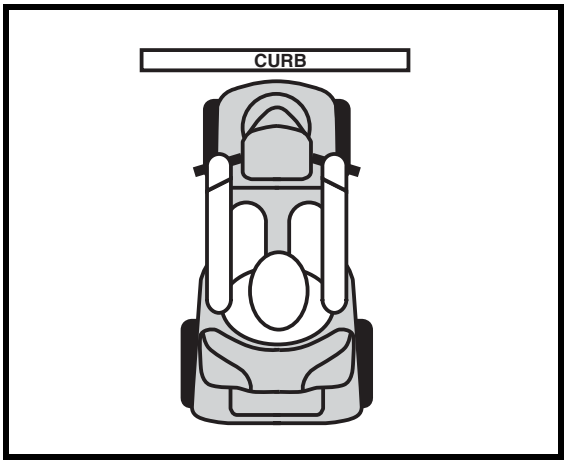

Figure 3. Correct Curb Approach

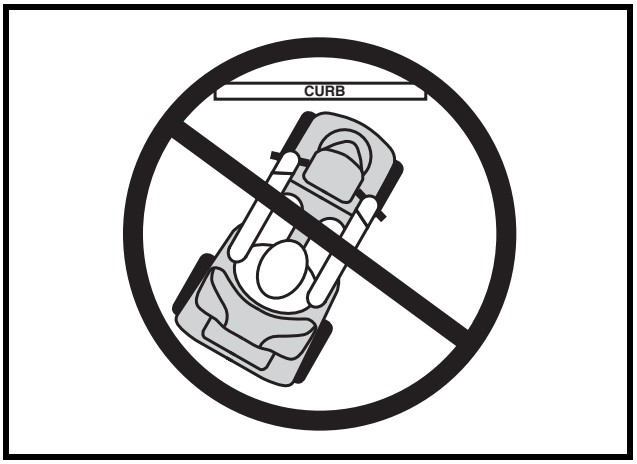

Figure 3A. Incorrect Curb Approach

INCLEMENT WEATHER PRECAUTIONS

Exposure of your scooter to inclement weather conditions should be avoided whenever possible. If suddenly caught up in rain, snow, severe cold, or heat while operating your scooter, proceed to shelter at the earliest opportunity. Thoroughly dry your scooter before storing, charging, or operating your scooter.

PROHIBITED! Operating in rain, snow, salt, mist/spray conditions, and on icy/slippery surfaces can cause damage to the scooter and electrical system. Maintain and store your scooter in a dry and clean condition.

WARNING! Prolonged exposure to hot or cold conditions may affect the temperature of upholstered and non-upholstered items on the scooter, possibly resulting in skin irritation. Exercise caution when using your scooter in extremely hot or cold conditions or when exposing your scooter to direct sunlight for prolonged periods of time.

II. SAFETY

FREEWHEEL MODE

Your scooter is equipped with a manual freewheel lever that, when engaged, allows the scooter to be pushed. For more information about how to place your scooter into and out of freewheel mode, see III. "Your Scooter."

WARNING! When your scooter is in freewheel mode, the braking system is disengaged.

- Disengage the drive motors only on a level surface.
- Ensure the key is removed from the key switch.
- Stand to the side of the scooter to engage or disengage freewheel mode. Never sit on a scooter to do this.
- After you have finished pushing your scooter, always return it to the drive mode to lock the brakes.

An added feature built into the scooter is "**push-too-fast**" protection which safeguards the scooter against gaining excessive speed while in freewheel mode.

"Push-too-fast" operates differently depending on which of two conditions exists:

- If the key is switched "off" while in freewheel mode, the scooter's controller activates regenerative braking when the scooter is pushed faster than a maximum threshold which has been preprogrammed. In this case, the controller is acting as a speed governor.
- If the key is switched "on" while in freewheel mode, you will encounter considerable resistance at any speed. This prevents the scooter from gaining unwanted momentum should the manual freewheel lever inadvertently be released while driving the scooter.

STAIRS AND ESCALATORS

Scooters are not designed to travel up or down stairs or escalators. Always use an elevator.

WARNING! Do not use your scooter to negotiate steps or escalators.

DOORS

- Determine if the door opens toward or away from you.
- Use your hand to turn the knob or push the handle or push-bar.
- Drive your scooter gently and slowly forward to push the door open. Or drive your scooter gently and slowly backwards to pull the door open.

ELEVATORS

Modern elevators have a door edge safety mechanism that, when pushed, reopens the door(s).

- If you are in the doorway of an elevator when the door(s) begin to close, push on the rubber door edge or allow the rubber door edge to contact the scooter and the door will reopen.
- Use care that pocketbooks, packages, or scooter accessories do not become caught in elevator doors.

NOTE: If your scooter's turning radius is greater than 60 in. (152.4 cm) it may be difficult to maneuver in elevators and building entrances. Use caution when attempting to turn or maneuver your scooter in small spaces, and avoid areas that might pose a problem.

II. SAFETY

LIFT SYSTEMS/ELEVATION PRODUCTS

If you will be transporting your scooter during travel, you may find it necessary to use a vehicle-mounted lift system or elevation product to aid in transportation. Pride recommends that you closely review the warnings, instructions, specifications, and safety information set forth by the manufacturer of the lift/ elevation product before using that product.

WARNING! Not all lift systems/elevation products are rated for use with an occupied mobility device. Pride recommends that you do not remain seated in your scooter when it is being used in connection with any type of lift system/elevation product unless:

- That product is rated for occupied use by the manufacturer.
- You are able to occupy your mobility device in strict conformity with the warnings, instructions, specifications, and safety guidelines set forth by the manufacturer.

WARNING! Always turn off the power to the scooter when you are being transferred via an elevation product. Failure to do so may result in accidental throttle control lever contact, resulting in unintended movement and personal injury or product damage.

BATTERIES

In addition to following the warnings below, be sure to comply with all other battery handling information.

MANDATORY! Battery posts, terminals, and related accessories contain lead and lead compounds. Wear goggles and gloves when handling batteries and wash hands after handling.

WARNING! Scooter batteries are heavy. See specifications table. If you are unable to lift that much weight, be sure to get help. Use proper lifting techniques and avoid lifting beyond your capacity.

WARNING! Always protect the batteries from freezing and never charge a frozen battery. Charging a frozen battery may result in damage to the battery.

WARNING! Connect the battery harnesses in the proper manner. RED (+) cables must be connected to positive (+) battery terminals/posts. BLACK (-) cables must be connected to negative (-) battery terminals/posts. Protective caps should be installed over all battery terminals. REPLACE cables immediately if damaged.

BATTERY DISPOSAL AND RECYCLING

If you encounter a damaged or cracked battery, immediately enclose it in a plastic bag. Contact your local waste disposal agency or your authorized Pride Provider for instructions on disposal and battery recycling, which is our recommended course of action.

PREVENTING UNINTENDED MOVEMENT

WARNING! If you anticipate being seated in a stationary position for an extended period of time, turn off the power. This will prevent unexpected motion from inadvertent throttle control lever contact.

II. SAFETY

MOTOR VEHICLE TRANSPORT

Pride recommends that you do not remain seated in your scooter while traveling in a motor vehicle. The scooter should be stowed in the trunk of a car or in the back of a truck or van with the batteries removed and properly secured. In addition, all removable scooter parts, including the armrests, seat, and shroud should be removed and/or properly secured during motor vehicle transport.

WARNING! Although your scooter may be equipped with a positioning belt, this belt is not designed to provide proper restraint during motor vehicle transport. Anyone traveling in a motor vehicle should be properly secured in the motor vehicle seat with safety belts fastened securely.

WARNING! Do not sit on your scooter while it is in a moving vehicle.

WARNING! Always be sure your scooter and its batteries are properly secured when it is being transported. Batteries should be secured in an upright position and protective caps should be installed on the battery terminals. Batteries should not be transported with any flammable or combustible items.

GETTING ONTO AND OFF OF YOUR SCOOTER

Getting onto and off of your scooter requires a good sense of balance. Please observe the following safety tips when getting onto and off of your scooter:

- Remove the key from the key switch.
- Ensure that your scooter is not in freewheel mode. See III. “Your Scooter.”
- Make certain that the seat is secured into place.
- Pivot the armrests up to make getting onto and off of the scooter easier.

WARNING! Position yourself as far back as possible in the scooter seat to prevent the scooter from tipping.

WARNING! Avoid putting all of your weight on the scooter armrests and do not use the armrests for weight bearing purposes, such as transfers. Such use may cause the scooter to tip, resulting in a fall from the scooter and personal injury.

WARNING! Avoid putting all of your weight on the floorboard. Such use may cause the scooter to tip.

REACHING AND BENDING

Avoid reaching or bending while driving your scooter. Bending forward creates the risk of accidental throttle control lever contact. Bending to the side while seated creates the risk of tipping. It is important to maintain a stable center of gravity and keep the scooter from tipping. Pride recommends that the scooter user determine his/her personal limitations and practice bending and reaching in the presence of a qualified attendant.

WARNING! Do not bend, lean, or reach for objects if you have to pick them up from the scooter deck or from either side of the scooter. Movements such as these may change your center of gravity and the weight distribution of the scooter and cause your scooter to tip.

PROHIBITED! Keep your hands away from the tires when driving. Be aware that loose fitting clothing can become caught in drive tires.

POSITIONING BELTS

Your authorized Pride Provider, therapist(s), and other healthcare professionals are responsible for determining your requirement for a positioning belt in order to operate your scooter safely.

WARNING! If you require a positioning belt to safely operate your scooter, make sure it is fastened securely.

II. SAFETY

PRESCRIPTION DRUGS/PHYSICAL LIMITATIONS

The scooter user must exercise care and common sense when operating his/her scooter. This includes awareness of safety issues when taking prescribed or over-the-counter drugs or when the user has specific physical limitations.

WARNING! Consult your physician if you are taking prescribed or over-the-counter medication or if you have certain physical limitations. Some medications and limitations may impair your ability to operate your scooter in a safe manner.

ALCOHOL/SMOKING

The scooter user must exercise care and common sense when operating his/her scooter. This includes awareness of safety issues while under the influence of alcohol or while smoking.

WARNING! Do not operate your scooter while you are under the influence of alcohol, as this may impair your ability to drive safely.

WARNING! Pride strongly recommends that you do not smoke cigarettes while seated in your scooter, although the scooter has passed the necessary testing requirements for cigarette smoking. You must adhere to the following safety guidelines if you decide to smoke cigarettes while seated in your scooter.

- Do not leave lit cigarettes unattended.
- Keep ashtrays a safe distance from the seat cushions.
- Always make sure cigarettes are completely extinguished before disposal.

ELECTROMAGNETIC AND RADIO FREQUENCY INTERFERENCE (EMI/RFI)

WARNING! Laboratory tests have shown that electromagnetic and radio frequency waves can have an adverse affect on the performance of electrically-powered mobility vehicles.

Electromagnetic and Radio Frequency Interference can come from sources such as cellular phones, mobile two-way radios (such as walkie-talkies), radio stations, TV stations, amateur radio (HAM) transmitters, wireless computer links, microwave signals, paging transmitters, and medium-range mobile transceivers used by emergency vehicles. In some cases, these waves can cause unintended movement or damage to the control system. Every electrically-powered mobility vehicle has an immunity (or resistance) to EMI. The higher the immunity level, the greater the protection against EMI. This product has been tested and has passed at an immunity level of 20 V/M.

WARNING! Be aware that cell phones, two-way radios, laptops, and other types of radio transmitters may cause unintended movement of your electrically-powered mobility vehicle due to EMI. Exercise caution when using any of these items while operating your mobility vehicle and avoid coming into close proximity of radio and TV stations.

WARNING! The addition of accessories or components to the electrically-powered mobility vehicle can increase the susceptibility of the vehicle to EMI. Do not modify your scooter in any way not authorized by Pride.

WARNING! The electrically-powered mobility vehicle itself can disturb the performance of other electrical devices located nearby, such as alarm systems.

NOTE: For further information on EMI/RFI, visit the Resource Center on www.pridemobility.com. If unintended motion or brake release occurs, turn your scooter off as soon as it is safe to do so. Contact your authorized Pride Provider to report the incident.

III. YOUR SCOOTER

TILLER CONSOLE

The tiller console houses all of the controls needed to drive your scooter, including the speed adjustment dial, key switch, hi-lo switch, battery condition meter, horn buttons, turn signal buttons, handbrake lever, tiller adjustment lever, and the throttle control lever. **See figure 4**.

PROHIBITED! Do not expose the tiller console to moisture. In the event that the tiller console does become exposed to moisture, do not attempt to operate your scooter until the tiller console has dried thoroughly.

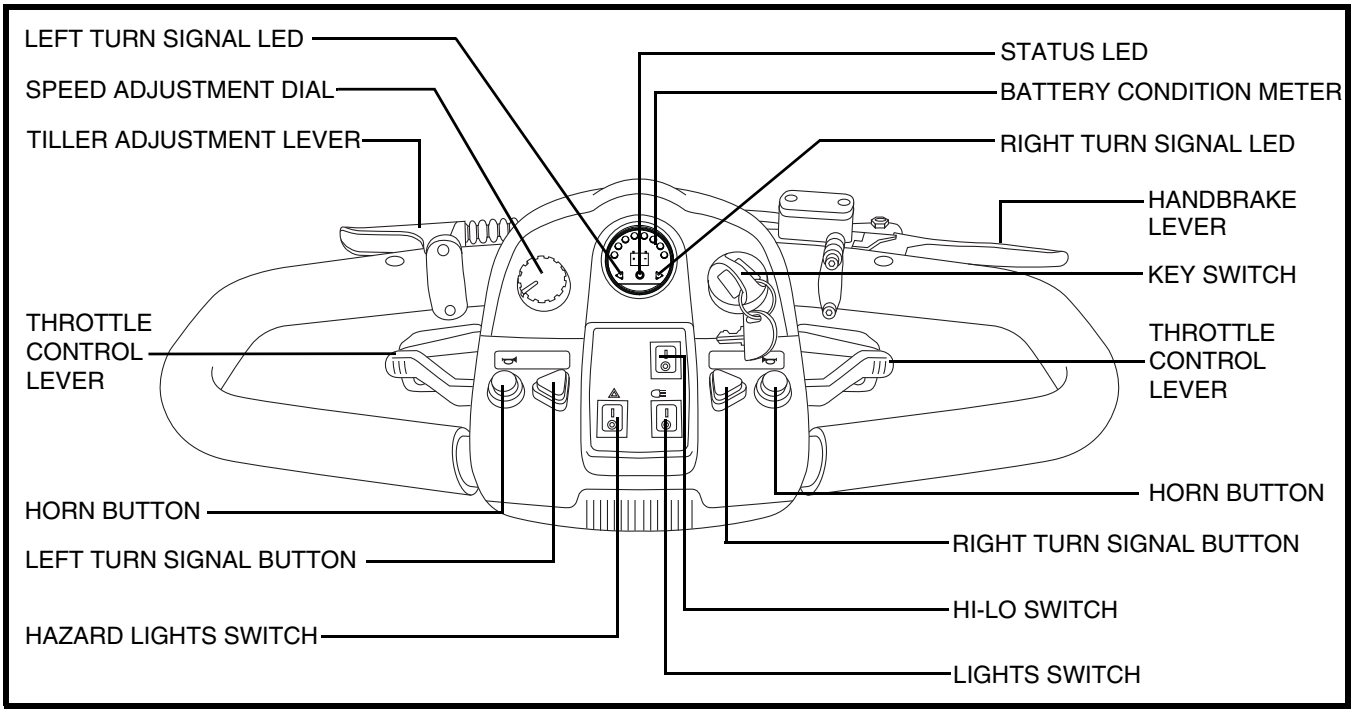

Figure 4. Tiller Console Components

Speed Adjustment Dial

This dial allows you to preselect and limit your scooter's top speed.

- The image of the tortoise represents the slowest speed setting.
- The image of the hare represents the fastest speed setting.

Key Switch

- Insert the key into the key switch and turn it clockwise to power up (turn on) your scooter.
- Turn the key counterclockwise to power down (turn off) your scooter.

WARNING! If the key is turned to the "off" position while your scooter is in motion, the electronic brakes will engage and your scooter will come to an abrupt stop!

Battery Condition Meter

When the key is fully inserted and turned clockwise to power up your scooter, this meter indicates the approximate battery voltage strength. For further information on battery charging, see IV. "Batteries and Charging."

Status LED
The status LED alerts you to electrical problems that may occur with the scooter. The LED remains constantly lit while your scooter is on. If your scooter develops an electrical problem, the status LED will flash a code. See VII. “Basic Troubleshooting” for flash codes.

Horn Buttons
These buttons activate a warning horn. Your scooter must be powered up for the horn to be operational. Do not hesitate to use the warning horn when doing so may prevent accident or injury.

Turn Signal Buttons
Use these buttons to turn on the left and right turn signal (amber) lights.
- Push the left button to activate the left turn signal light. The turn signal LED located in the battery condition meter will flash.
- Push the right button to activate the right turn signal light. The turn signal LED located in the battery condition meter will flash.
- The turn signals are timed to shut off automatically.

Lights Switch
This switch controls your scooter’s lighting system.
- Toggle the switch forward to turn on the lighting system.
- Toggle the switch backward to turn off the lighting system.

WARNING! Scooter users are required to use their lights when visibility is restricted—day or night.

Hazard Lights Switch
This switch activates the 4-way flashers on your scooter.
- Toggle the hazard lights switch forward to turn on the flashers.
- Toggle the hazard lights switch backward to turn off the flashers.

Throttle Control Lever
This lever allows you to control the forward speed and the reverse speed of your scooter up to the maximum speed you preset with the speed adjustment dial.

To Move Forward, use either of the following:
- Use your left thumb to push the left side of the throttle control lever.
- Use your right hand fingers to pull back on the right side of the throttle control lever.

To Move Backward, use either of the following:
- Use your right thumb to push the right side of the throttle control lever.
- Use your left hand fingers to pull back on the left side of the throttle control lever.

Release the throttle control lever and allow your scooter to come to a complete stop before engaging the other side of the lever. When the throttle control lever is completely released, it automatically returns to the center “stop” position and engages your scooter’s brakes.

Hi-Lo Switch

This switch toggles the scooter's speed between HI and LO.

- Toggle the switch forward (HI) and your scooter's maximum speed is 8.5 mph (13.7 km/h).
- Toggle the switch backward (LO) and your scooter's maximum speed is 4.25 mph (6.8 km/h).

Handbrake Lever

This lever provides you with emergency stopping power. When in motion, release the throttle control lever and gently squeeze the handbrake lever to come to a stop.

The handbrake can be locked and used as as a parking brake by squeezing the handbrake lever fully and moving the brake lock to the locked position. **See figure 5**. To release the brake lock, fully squeeze the handbrake.

WARNING! The handbrake is intended for use as an emergency brake and/or parking brake only.

Off-board Charger Port

The off-board charger power cord plugs into this port during battery charging. The off-board charger port will be located on the tiller. **See figure 6**.

Electrical System Fuses

Your scooter is equipped with a series of electrical system fuses, which help protect the off-board charging system, key switch, and lighting system from receiving an overload of electrical current. These fuses are the same type used in automobiles and are located in a compartment on the tiller. **See figure 7**.

NOTE: Keep all electrical areas clean and free of moisture and foreign material.

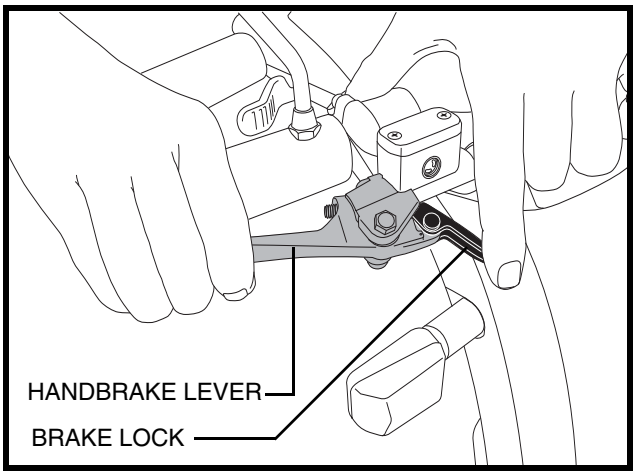

Figure 5. Handbrake Lever and Brake Lock (In The Locked Position)

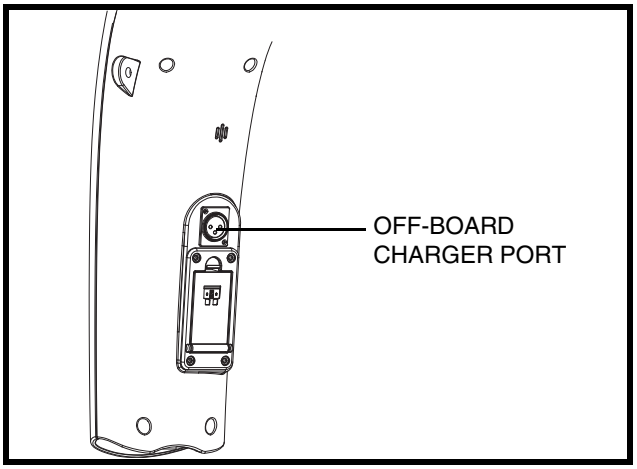

Figure 6. Off-board Charger Port (Tiller Mounted)

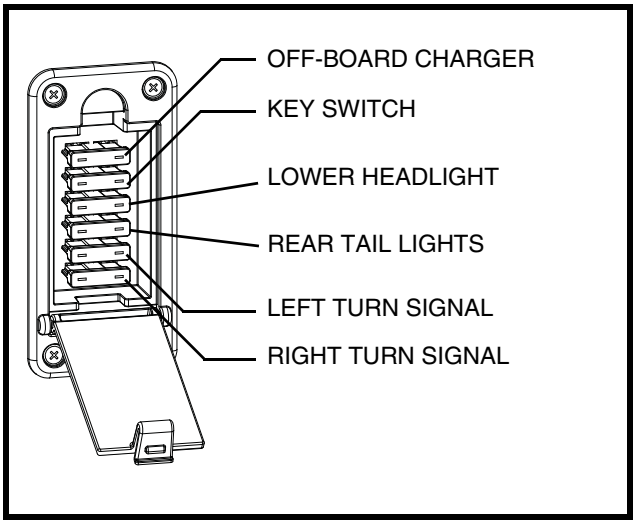

Figure 7. Tiller Console Fuses

REAR SECTION

The batteries, motor/transaxle assembly, and the manual freewheel lever are located on the rear section of your scooter. **See figure 8**.

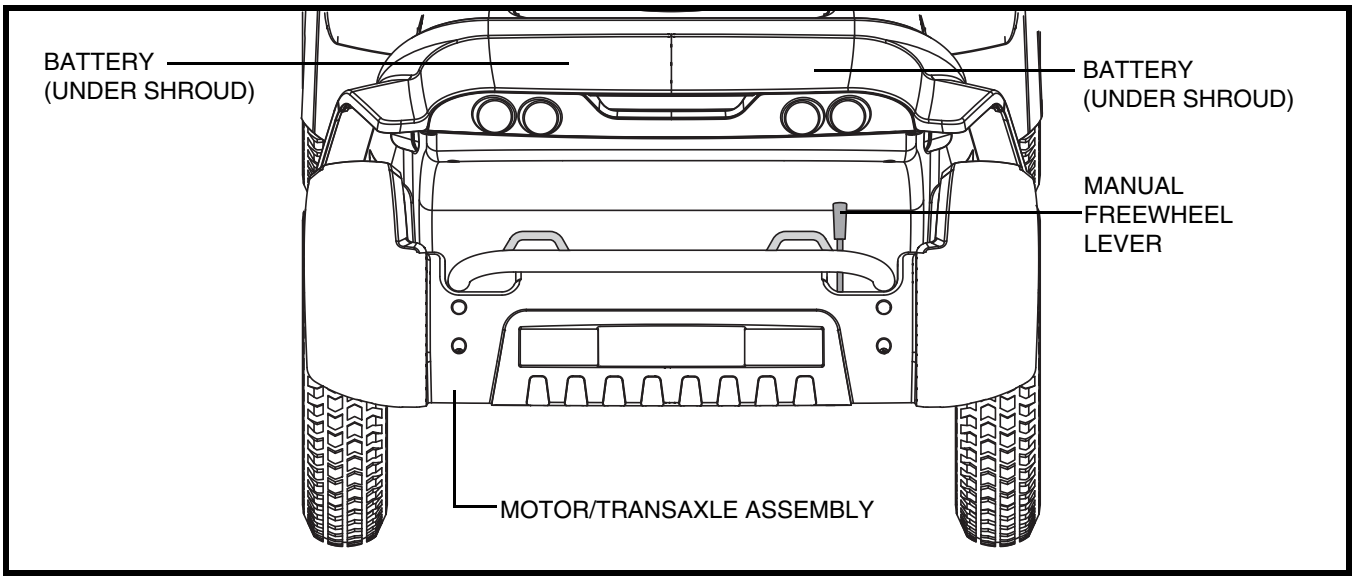

Figure 8. Rear Section

Batteries

The batteries store electrical energy that powers your scooter. See IV. “Batteries and Charging ” for information on how to charge your scooter batteries.

Motor/Transaxle Assembly

The motor/transaxle assembly is an electromechanical unit that converts electrical energy from your scooter’s batteries into the controlled mechanical energy that drives the scooter’s wheels.

Manual Freewheel Lever

Whenever you need or want to push your scooter for short distances, you can put it in freewheel mode.

1. Remove the key from the key switch.
2. Push forward on the manual freewheel lever to disable the drive system and the brake system. This will enable you to push the scooter.
3. Pull back on the manual freewheel lever to reengage the drive and the brake systems and take your scooter out of freewheel mode.

WARNING! When your scooter is in freewheel mode, the braking system is disengaged.

- Disengage the drive motors only on a level surface.
- Ensure the key is removed from the key switch.
- Stand to the side of the scooter to engage or disengage freewheel mode. Never sit on a scooter to do this.
- After you have finished pushing your scooter, always return it to the drive mode to lock the brakes.

NOTE: If the scooter is placed in freewheel mode (manual freewheel lever forward) while the key is in the “on” position, the scooter will not run until the manual freewheel lever is pushed backward and the key is turned to the “off” position, then back to the “on” position.

Main Circuit Breaker

When the voltage in the batteries becomes low or your scooter is heavily strained because of excessive loads, the main circuit breaker may trip to protect the motor and electronics from damage. When the breaker trips, the entire electrical system shuts down. **See figure 9**.

- The reset lever flips down when the breaker trips.
- Allow a minute or so for the electronics to "rest."
- Push the reset lever up until you hear a click to reset the breaker.

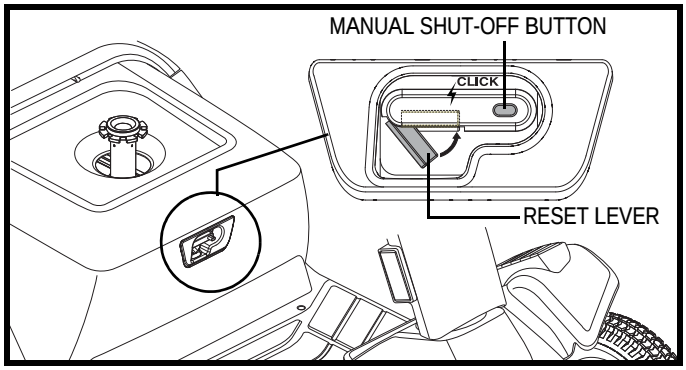

Figure 9. Main Circuit Breaker

- If the breaker trips frequently, you may need to charge the batteries more often or have your authorized Pride Provider perform a load test on the batteries.
- If the main circuit breaker trips repeatedly, see your authorized Pride Provider for service.

NOTICE: If you are preparing the scooter for transport or service, or if there is a situation that requires you to manually shut down the electrical system, press the manual shut-off button on the circuit breaker. This will cut all power to the scooter.

SECURING THE SCOOTER

Always secure the scooter in a forward-facing position in the vehicle. Attach the four tie-down straps to the designated securement points. **See figures 10 and 10A.** Tighten the straps to sufficiently remove all slack. Never attach tie-downs to adjustable, moving, or removable parts of the scooter such as armrests, shrouds, and wheels. These items should be removed. Position the anchor points for the rear tie-down straps directly behind the rear securement points on the scooter. The front tie-down straps should anchor to floor points that are spaced wider than the scooter to provide increased lateral stability.

WARNING! Ensure scooters are properly secured to the motor vehicle during transport. Scooters that are not properly secured can become a hazard to the user and to other vehicle passengers in the event of a crash, sudden stopping, or swerving, as the scooter could tip or slide out of place.

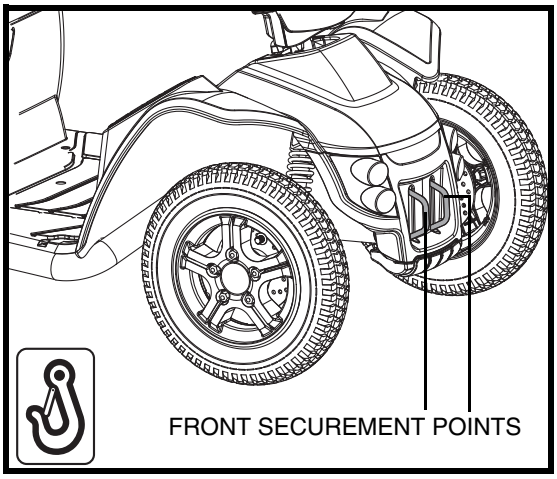

Figure 10. Front Section

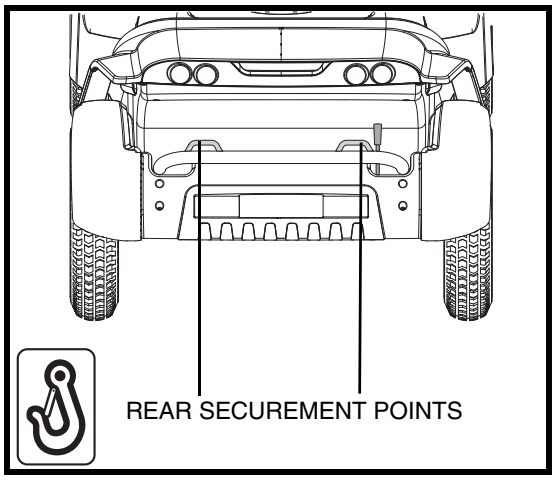

Figure 10A. Rear Section

IV. BATTERIES AND CHARGING

BATTERIES AND CHARGING

Your scooter requires two long-lasting, 12-volt, deep-cycle batteries that are sealed and maintenance free. They are recharged by an off-board charging system.

- Charge your scooter's batteries prior to using it for the first time.
- Keep the batteries fully charged to keep your scooter running smoothly.

READING YOUR BATTERY VOLTAGE

The battery condition meter on the tiller console indicates the approximate strength of your batteries using a color code. From right to left, green indicates fully charged batteries, yellow indicates a draining charge, and red indicates that an immediate recharge is necessary. **See figure 11**. To ensure the highest accuracy, the battery condition meter should be checked while operating your scooter at full speed on a dry, level surface.

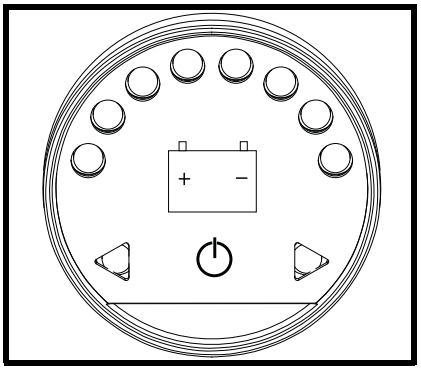

Figure 11. Battery Condition Meter

CHARGING YOUR BATTERIES

PROHIBITED! Removal of grounding prong can create electrical hazard. If necessary, properly install an approved 3-pronged adapter to an electrical outlet having 2-pronged plug access.

PROHIBITED! Never use an extension cord to plug in your battery charger. Plug the charger directly into a properly wired standard electrical outlet.

PROHIBITED! Do not allow unsupervised children to play near the scooter while the batteries are charging. Pride recommends that you do not charge the batteries while the scooter is occupied.

MANDATORY! Read the battery charging instructions in this manual and in the manual supplied with the battery charger before charging the batteries.

WARNING! Explosive gases may be generated while charging the batteries. Keep the scooter and battery charger away from sources of ignition such as flames or sparks and provide adequate ventilation when charging the batteries.

WARNING! You must recharge your scooter's batteries with the supplied off-board charger. Do not use an automotive-type battery charger.

WARNING! Inspect the battery charger, wiring, and connectors for damage before each use. Contact your authorized Pride Provider if damage is found.

WARNING! Do not attempt to open the battery charger case. If the battery charger does not appear to be working correctly, contact your authorized Pride Provider.

WARNING! If the battery charger is equipped with cooling slots, then do not attempt to insert objects through these slots.

WARNING! If your battery charger has not been tested and approved for outdoor use, then do not expose it to adverse or extreme weather conditions. If the battery charger is exposed to adverse or extreme weather conditions, then it must be allowed to adjust to the difference in environmental conditions before use indoors. Refer to the manual supplied with the battery charger for more information.

IV. BATTERIES AND CHARGING

Follow these easy steps to charge the batteries:

1. Position the front of your scooter close to a standard electrical outlet.
2. Remove the key from the key switch.
3. Make sure that the manual freewheel lever is in the drive position.
4. Plug the 3-pin charger power cord into the off-board charger port. **See figures 6 and 12**.
5. Extend the charger power cord and plug it into the electrical outlet. We recommend that you charge the batteries for 8 to 14 hours.
6. When the batteries are fully charged, unplug the charger power cord from the electrical outlet and then from the off-board charger port.

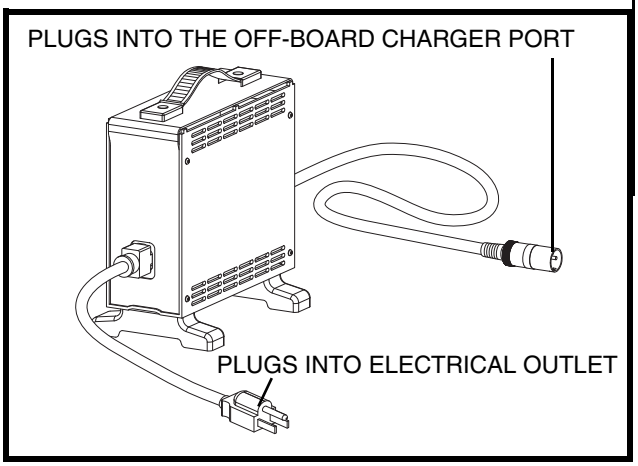

Figure 12. Off-board Charger

NOTE: The LED lights on the charger indicate different charger conditions at various times: charger power on, charging in progress, and charging complete. Refer to the manual supplied with the charger for a complete explanation of these indicators.

NOTE: There is a charger inhibit function on your scooter. The scooter will not run and the battery condition meter will not operate while the batteries are charging.

FREQUENTLY ASKED QUESTIONS

How does the charger work?
When your scooter's battery voltage is low, the charger works harder, sending more electrical current to the batteries to bring up their charge. As the batteries approach a full charge, the charger sends less and less electrical current. When the batteries are fully charged, the current sent from the charger is at nearly zero amperage. Therefore, when the charger is plugged in, it maintains the charge on your scooter's batteries, but does not overcharge them. We do not recommend that you charge your scooter's batteries for more than 24 consecutive hours.

Can I use a different charger?
Chargers are selected precisely for particular applications and are especially matched to the type, size, and chemical formulation of specific batteries. For the safest and most efficient charging of your scooter's batteries we recommend only use of the charger supplied as original equipment with your Pride product. Any charging method resulting in batteries being charged individually is especially prohibited.

What if my scooter's batteries won't charge?

- Ensure the red (+) and black (-) battery cables are connected properly to the battery terminals.
- Ensure both ends of the charger power cord are inserted fully.

How often must I charge the batteries?
Two major factors must be considered when deciding how often to charge your scooter's batteries:

- All day scooter use on a daily basis.
- Infrequent or sporadic scooter use.

IV. BATTERIES AND CHARGING

With these considerations in mind, you can determine how often and for how long you should charge your scooter's batteries. We designed the off-board charger so that it will not overcharge your scooter's batteries. However, you may encounter some problems if you do not charge your batteries often enough and if you do not charge them on a regular basis.

Following the guidelines below will provide safe and reliable battery operation and charging:

- If you use your scooter daily, charge its batteries as soon as you finish using it for the day. Your scooter will be ready each morning. We recommend that you charge your scooter's batteries for 8 to 14 hours after daily use.
- If you use your scooter once a week or less, charge its batteries at least once a week for 12 to 14 hours at a time.
- Keep your scooter's batteries fully charged.
- Avoid deeply discharging your scooter's batteries.

How can I ensure maximum battery life?

Fully charged deep-cycle batteries provide reliable performance and extended battery life. Keep your scooter's batteries fully charged whenever possible. Protect your scooter and batteries from extreme heat or cold. Batteries that are regularly and deeply discharged, infrequently charged, stored in extreme temperatures, or stored without a full charge may be permanently damaged, causing unreliable performance and limited service life.

How can I get maximum range or distance per charge?

Rarely will you have ideal driving conditions—smooth, flat, hard driving surfaces with no wind or curves. Often, you will face hills, pavement cracks, uneven and loosely packed surfaces, curves, and wind, all of which affect the distance or running time per battery charge. Below are a few suggestions for obtaining the maximum range per battery charge.

- Always fully charge your scooter's batteries prior to daily use.
- Maintain but do not exceed the psi/bar/kPa air pressure rating indicated on each tire.
- Plan your route ahead to avoid as many hills, cracked, broken, or soft surfaces as possible.
- Limit your baggage weight to essential items.
- Try to maintain an even speed while your scooter is in motion.
- Avoid stop-and-go driving.

What type and size of battery should I use?

We recommend deep-cycle batteries that are sealed and maintenance free. Both AGM and Gel-Cell are deep-cycle batteries that are similar in performance. Do not use wet-cell batteries, which have removable caps.

WARNING! Corrosive chemicals are contained in batteries. Use only AGM or Gel-Cell batteries to reduce the risk of leakage or explosive conditions.

NOTE: Sealed batteries are not serviceable. Do not remove the caps.

IV. BATTERIES AND CHARGING

How do I change a battery in my scooter?

MANDATORY! Battery posts, terminals, and related accessories contain lead and lead compounds. Wear goggles and gloves when handling batteries and wash hands after handling.

WARNING! Always use two batteries of the exact same type, chemistry, and amp-hour (Ah) capacity. Refer to the specifications table in this manual and in the manual supplied with the battery charger for recommended type and capacities.

WARNING! Do not mix old and new batteries. Always replace both batteries at the same time.

WARNING! Contact your authorized Pride Provider if you have any questions regarding the batteries in your scooter.

WARNING! Do not replace the batteries while the scooter is occupied.

WARNING! The batteries on your scooter should only be serviced or replaced by an authorized Pride Provider or a qualified technician.

PROHIBITED! Keep tools and other metal objects away from battery terminals. Contact with tools can cause electrical shock.

You may need the following to change your batteries:

- Metric/standard socket set and ratchet
- Adjustable wrench

To change the batteries in your scooter:

WARNING! Do not lift beyond your physical capability. Ask for assistance when necessary while disassembling or assembling your scooter.

1. Remove the seat by lifting it straight up and off of the scooter. If you encounter resistance when removing the seat, disengage the seat rotation lever and swivel the seat back and forth while lifting up on the seat.
2. Remove the rear shroud by lifting it straight up and off the scooter. The shroud is secured to the scooter with resuable fasteners amd two thumbscrews. **See figure 13**.

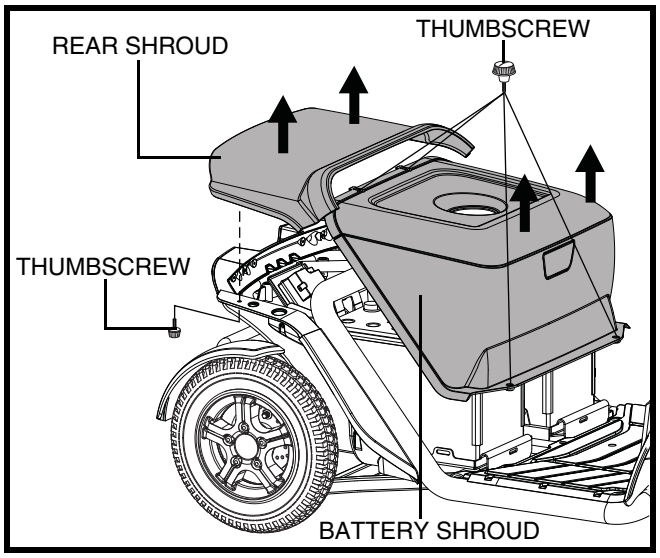

Figure 13. Shroud Removal/Installation

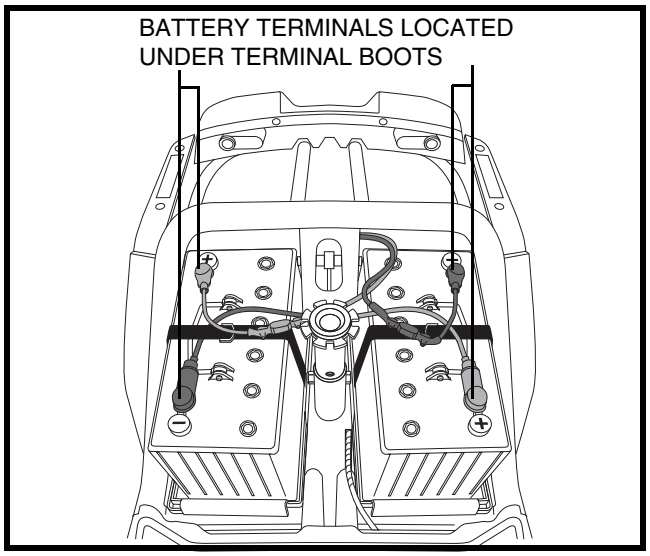

Figure 14. Battery Removal/Replacement

3. Remove the battery shroud by removing the four (4) thumbscrews that secure it to the scooter frame, and then lifting the shroud straight up and off of the scooter. **See figure 13**.
4. Disconnect the battery tie-down straps.
5. Disconnect the battery cables from the battery terminals by sliding back the terminal boots and unscrewing the nut from the bolt. **See figure 14**.
6. Remove the old batteries from the battery wells.
7. Place a new battery in each battery well. Face the battery terminals of each battery away from the seat post. **See figure 14A**.
8. Connect the red battery cable to the positive (+) battery terminal on each battery.
9. Connect the black battery cable to the negative (-) battery terminal on each battery.
10. Reposition the terminal boots over the battery terminals.
11. Reconnect the battery tie-down straps.
12. Reinstall the battery shroud, the rear shroud, and the seat.

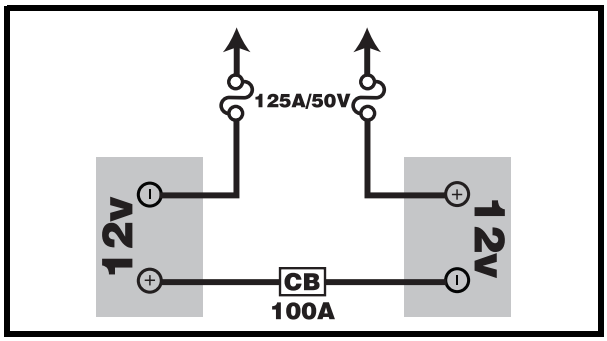

Figure 14A. Battery Wiring Diagram

NOTE: If you encounter a damaged or cracked battery, immediately enclose it in a plastic bag. Contact your local waste disposal agency or your authorized Pride Provider for instructions on disposal and battery recycling, which is our recommended course of action.

Why do my new batteries seem weak?
Deep-cycle batteries employ a different chemical technology than that used in car batteries, nickel-cadmium batteries (nicads), and other common battery types. Deep-cycle batteries are specifically designed to provide power, drain down their charge, and then accept a relatively quick recharge.

We work closely with our battery manufacturer to provide batteries that best suit your scooter's specific electrical demands. Fresh batteries are shipped fully charged to our customers. During shipping, the batteries may encounter temperature extremes that can influence their initial performance. Heat diminishes the charge on the battery; cold slows the available power and extends the time needed to recharge the battery.

It may take a few days for the temperature of your scooter's batteries to stabilize and adjust to their new room or ambient temperature. More importantly, it takes a few charging cycles (partial draining followed by full recharging) to establish the critical chemical balance that is essential to a deep-cycle battery's peak performance and long life.

IV. BATTERIES AND CHARGING

Follow these steps to properly break in your scooter's new batteries for maximum efficiency and service life:

1. Fully recharge any new battery prior to its initial use. This charging cycle brings the battery up to about 88% of its peak performance level.
2. Operate your new scooter in familiar and safe areas. Drive slowly at first, and do not travel too far from your home or familiar surroundings until you have become accustomed to your scooter's controls and have properly broken in your scooter's batteries.
3. Fully recharge the batteries. They should be at over 90% of their peak performance level.
4. Operate your scooter again.
5. Fully recharge the batteries again.
6. After four or five charging cycles, the batteries are able to receive a charge of 100% of their peak performance level and are able to last for an extended period of time.

What about public transportation?

If you intend to use public transportation with your scooter, you must contact the transportation provider in advance to determine their specific requirements.

V. OPERATION

BEFORE GETTING ONTO YOUR SCOOTER

- Have you fully charged the batteries? See IV. “Batteries and Charging.”
- Is the manual freewheel lever in the drive (backward) position? Never leave the manual freewheel lever pushed forward unless you are manually pushing your scooter.

GETTING ONTO YOUR SCOOTER

1. Make certain that the key is removed from the key switch.

WARNING! Never attempt to get onto or off of your scooter without first removing the key from the key switch. This will prevent the scooter from moving if accidental throttle control lever contact is made.

2. Stand at the side of your scooter.
3. Disengage the seat rotation lever and rotate the seat until it is facing you.
4. Make certain that the seat is fixed securely in position.
5. Position yourself comfortably and securely in the seat.
6. Disengage the seat rotation lever and rotate the seat until you are facing forward.
7. Make certain that the seat is fixed securely in position.
8. Make certain that your feet are safely on the floorboard.

PRE-RIDE ADJUSTMENTS AND CHECKS

- Is the seat at the proper height? See VI. “Comfort Adjustments.”
- Is the seat fixed securely in position?
- Is the tiller at a comfortable setting and locked securely in place? See VI. “Comfort Adjustments.”
- Is the key fully inserted into the key switch and turned clockwise to the “on” position?
- Does the horn work properly?
- Is your proposed path clear of people, pets, and obstacles?
- Have you planned your route to avoid adverse terrain and as many inclines as possible?

OPERATING YOUR SCOOTER

WARNING! The following can adversely affect steering and stability while operating your scooter, resulting in loss of control, tipping, and/or personal injury:

- Holding onto or attaching a leash to walk your pet
- Carrying passengers (including pets)
- Hanging any article from the tiller
- Towing or being pushed by another motorised vehicle

WARNING! Higher Rollover Risk! Avoid abrupt maneuvers at excessive speed. It is recommended that you set the speed adjustment dial to the lowest setting until you become familiar with scooter controls and operation.

WARNING! Keep both hands on the tiller and your feet on the floorboard at all times while operating your scooter. This driving position gives you the most control over your vehicle.

- Set the speed adjustment dial to your desired speed.
- Push or pull the appropriate side of the throttle control lever.
- The electromechanical disc park brake automatically disengages and the scooter accelerates smoothly to the speed you preselected with the speed adjustment dial.
- Pull on the left handgrip to steer your scooter to the left.
- Pull on the right handgrip to steer your scooter to the right.

- Move the tiller to the center position to drive straight ahead.
- To stop, slowly release the throttle control lever. The electronic brakes will automatically engage, bringing your scooter to a stop.

NOTE: Your scooter's reverse speed is slower than that of the forward speed you preset with the speed adjustment dial.

GETTING OFF OF YOUR SCOOTER

1. Bring your scooter to a complete stop.
2. Power down your scooter and remove the key from the key switch.
3. Disengage the seat rotation lever and rotate the seat until you are facing toward the side of your scooter.
4. Make certain that the seat is fixed securely in position.
5. Carefully and safely get out of the seat and stand to the side of your scooter.
6. You can leave the seat facing to the side to facilitate boarding your scooter next time.

POWER DOWN TIMER FEATURE

Your scooter is equipped with an energy saving automatic power down timer feature designed to preserve your scooter's battery life. If you mistakenly leave the key in the key switch and in the "on" position but do not use your scooter for approximately 20 minutes, the scooter's controller shuts down automatically. Although the controller is shut down, power will still be supplied to the scooter's lighting system.

If the power down timer feature takes effect, perform the following steps to resume normal operation:

1. Remove the key from the key switch.
2. Reinsert the key and power up your scooter.

VI. COMFORT ADJUSTMENTS

TILLER ANGLE ADJUSTMENT

WARNING! Remove the key from the key switch before adjusting the tiller or the seat. Never attempt to adjust the tiller or the seat while the scooter is in motion.

Your scooter is equipped with an adjustable pivoting tiller.

1. Squeeze the tiller adjustment lever. **See figure 15**.
2. Move the tiller to a comfortable position.
3. Release the tiller adjustment lever.

NOTE: In order to fully lower the tiller for purposes of disassembly or transport, you must first completely remove the seat.

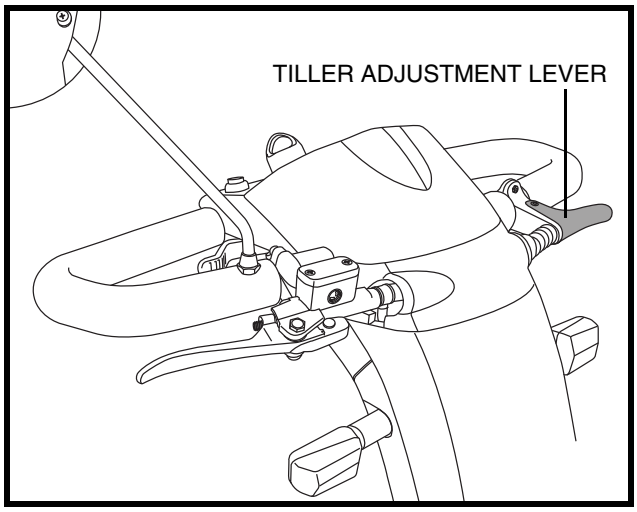

Figure 15. Tiller Adjustment

MIRROR POSITION

To install the mirror (see figure 16):

1. Determine on which side to install the mirror and remove the rubber plug from the top of the tiller handle.
2. Insert the threaded end of the mirror holder into the opening and rotate it clockwise until snug.
3. If necessary, rotate the nut clockwise to secure the mirror in place.

To adjust the mirror:

1. Position yourself in a seated driving position facing forward.
2. Adjust the mirror left, right, up, or down until you have a good line of sight behind you.

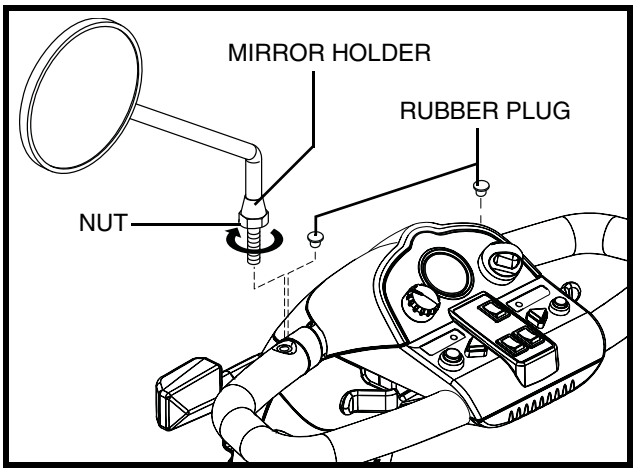

Figure 16. Mirror Installation and Positioning

SEATBACK ADJUSTMENT

WARNING! Do not operate your scooter with the seatback in a reclined position.

WARNING! Always keep your back pressed firmly against the seatback while adjusting the angle.

To adjust your scooter's reclining seat, perform these steps. **See figure 17**.

1. With your back pressed up against the seatback, lift up on the seatback adjustment lever and lean forward or backward to adjust the seatback angle.
2. Release the seatback adjustment lever once the seat is in a comfortable riding position.

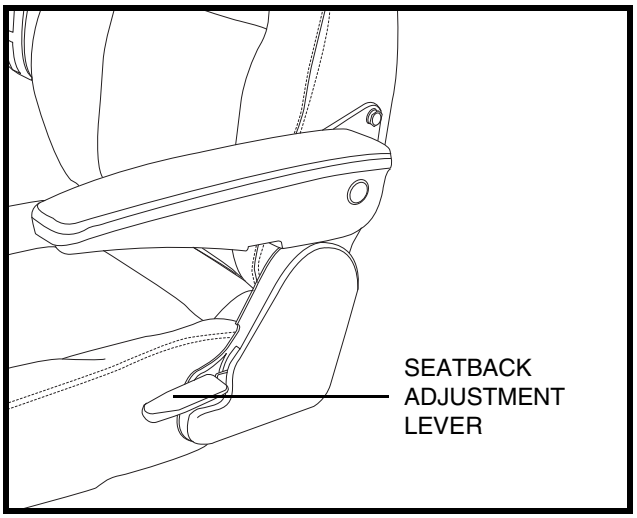

Figure 17. Seatback Adjustment

VI. COMFORT ADJUSTMENTS

SEAT ROTATION ADJUSTMENT

The seat rotation lever will secure the seat into several positions.

1. Push forward on the seat rotation lever to disengage the seat. **See figure 18**.
2. Rotate the seat to the desired position.
3. Release the lever to secure the seat into place.

FRONT-TO-BACK SEAT ADJUSTMENT

You can reposition the seat forward or backward to adjust the distance between the seat and the tiller.

1. Move the seat sliding lever located at the lower left side of the seat outward. **See figure 18**.
2. While holding the lever out, slide the seat forward or backward.
3. Release the seat sliding lever once the seat is in the desired position.

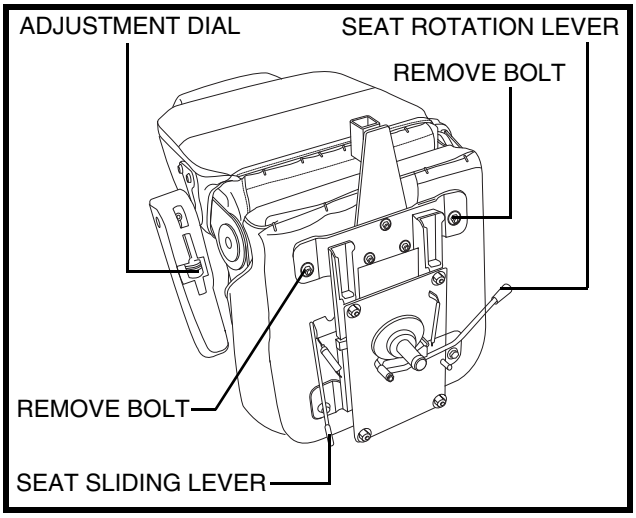

Figure 18. Seat Position Adjustments

ARMREST ANGLE ADJUSTMENT

There is an armrest adjustment dial on the underside of each armrest. **See figure 18**. Turn the armrest adjustment dial to the left to lower the armrest angle or to the right to raise the armrest angle.

NOTE: The armrests also pivot upward to make getting on and off of your scooter easier.

SEAT HEIGHT ADJUSTMENT

The seat can be repositioned to several different heights. **See figure 19**.

1. Remove the seat and/or shroud from your scooter.
2. Remove the seat height adjustment bolt.
3. Raise or lower the upper seat post to the desired seat height.
4. While holding the upper seat post at that height, match up the locating holes in the upper seat post with those of the lower seat post.
5. Insert the seat height adjustment bolt through the locating holes of both the upper and lower seat posts.
6. Reinstall the nut onto the seat height adjustment bolt and tighten.
7. Reinstall the rear shroud and the seat.

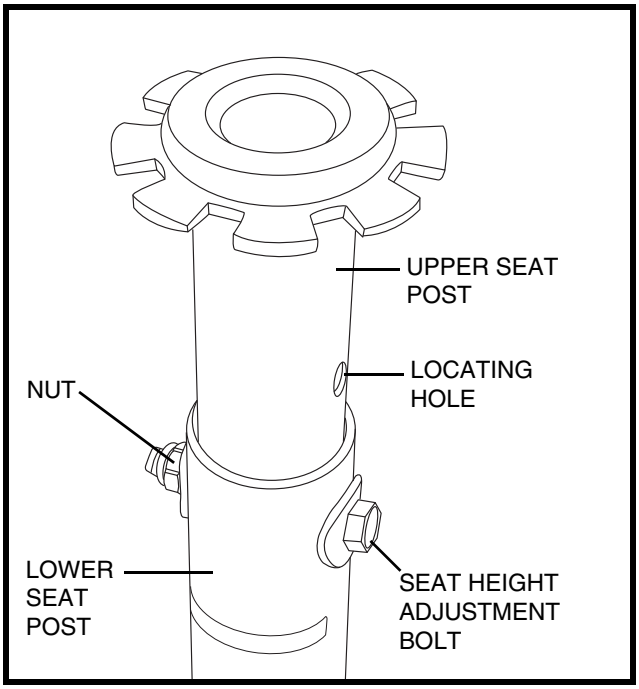

Figure 19. Seat Height Adjustment

VII. BASIC TROUBLESHOOTING

Any electromechanical device occasionally requires some troubleshooting. However, most of the problems that may arise can usually be solved with a bit of thought and common sense. Many of these problems occur because the batteries are not fully charged or because the batteries are worn down and can no longer hold a charge.

DIAGNOSTIC FAULT CODES

The diagnostic fault codes for your scooter are designed to help you perform basic troubleshooting quickly and easily. A diagnostic flash code will flash from the status LED in the event one of the conditions listed below develops.

NOTE: Your scooter will not run unless the fault code condition is resolved and the scooter has been turned off, then turned back on.

FAULT CODE	CONDITION	SOLUTION
■ (1)	Battery charge is low.	Charge batteries as soon as possible.
■ ■ (2)	Battery charge is too low.	Charge batteries.
■ ■ ■ (3)	The scooter's battery voltage is too high to operate the scooter, or the charger is still connected to the off-board charger port.	Unplug charger and/or turn key off, then back on again.
■ ■ ■ ■ (4)	Current limit time out.	Turn the scooter off for a few minutes, then turn your scooter back on.
■ ■ ■ ■ ■ (5)	The manual freewheel lever is in the (forward) freewheel position.	Remove the key from the key switch, then push the manual freewheel lever to the drive (backward) position and restart your scooter.
■ ■ ■ ■ ■ ■ (6)	Throttle control lever not at center position at start up.	Return the throttle control lever to center position, turn scooter off then back on.
■ ■ ■ ■ ■ ■ ■ (7)	Speed pot error.	Call your authorized Pride Provider for assistance.
■ ■ ■ ■ ■ ■ ■ ■ (8)	Motor volts error.	Call your authorized Pride Provider for assistance.
■ ■ ■ ■ ■ ■ ■ ■ ■ (9)	Other internal errors.	Call your authorized Pride Provider for assistance.

What if all the systems on my scooter seem to be dead?

- Make certain that the key is in the “on” position.
- Check that the batteries are fully charged.
- Push in the main circuit breaker reset button. See III. “Your Scooter.”
- Make certain that both battery harnesses and the front-to-rear harness are firmly connected.
- Be sure the power down timer feature has not been activated. See V. “Operation.”

VII. BASIC TROUBLESHOOTING

What if my scooter does not move when I engage the throttle control lever?

- When the manual freewheel lever is pushed forward, the brakes are disengaged and all power to the motor/transaxle assembly is cut.
- Push backward on the manual freewheel lever, turn the scooter off, and then turn the scooter on to return to normal scooter operation.

What if the main circuit breaker repeatedly trips?

- If the main circuit breaker trips repeatedly, see your authorized Pride Provider for service.
- Charge the batteries more frequently. See IV. “Batteries and Charging.”
- If the problem continues, have both of your scooter’s batteries load tested by your authorized Pride Provider.
- You may also perform the load test yourself. Battery load testers are available at most automotive parts stores. Follow the directions supplied with the load tester.
- See IV. “Batteries and Charging” or “Appendix I - Specifications” for information about your scooter’s battery type.

What if the battery condition meter dips way down and the motor surges or hesitates when I engage the throttle control lever?

- Fully charge your scooter’s batteries. See IV. “Batteries and Charging.”
- Have your authorized Pride Provider load test each battery.
- See the previous troubleshooting question for load testing the batteries yourself.

If you experience any problems with your scooter that you are not able to solve, immediately contact your authorized Pride Provider for information, maintenance, and service.

VIII. CARE AND MAINTENANCE

Your scooter requires a minimal amount of care and maintenance. If you do not feel confident in your ability to perform the maintenance listed below, you may schedule inspection and maintenance at your authorized Pride Provider. The following areas require periodic inspection and/or care and maintenance.

TIRE PRESSURE

- If equipped with pneumatic tires, always maintain the psi/bar/kPa air pressure rating indicated on each tire.

WARNING! It is important that the psi/bar/kPa air pressure rating indicated on each tire be maintained in pneumatic tires at all times. Do not underinflate or overinflate your tires. Low pressure may result in loss of control, and overinflated tires may burst. Failure to maintain the psi/bar/kPa air pressure rating indicated on the tires at all times may result in tire and/or wheel failure.

- Regularly inspect your scooter's tires for signs of wear.

EXTERIOR SURFACES

Bumpers, tires, and trim can benefit from an occasional application of a rubber or vinyl conditioner.

WARNING! Do not use a rubber or vinyl conditioner on the scooter's vinyl seat or tire tread, as this may cause them to become dangerously slippery.

CLEANING AND DISINFECTION

- Use a damp cloth and mild, non-abrasive cleanser to clean the plastic and metal parts of your scooter. Avoid using products that may scratch the surface of your scooter.
- If necessary, clean your product with an approved disinfectant. Make sure the disinfectant is safe for use on your product before application.

WARNING! Follow all safety instructions for the proper use of the disinfectant and/or cleaning agent before applying it to your product. Failure to comply may result in skin irritation or premature deterioration of upholstery and/or scooter finishes.

BATTERY TERMINAL CONNECTIONS

- Make certain that the terminal connections remain tight and uncorroded.
- The batteries must sit flat in the battery wells.
- The battery terminals should face away from the seat post.

WIRING HARNESSES

- Regularly check all wiring connections.
- Regularly check all wiring insulation, including the charger power cord, for wear or damage.
- Have your authorized Pride Provider repair or replace any damaged connector, connection, or insulation that you find before using your scooter again.

PROHIBITED! Even though the scooter has passed the necessary testing requirements for ingress of liquids, you should keep electrical connections away from sources of dampness, including direct exposure to water or bodily fluids and incontinence. Check electrical components frequently for signs of corrosion and replace as necessary.

WARNING! Do not pull on electrical harnesses directly to detach them from the scooter. Always grasp the connector itself when disconnecting the harness to prevent wire damage.

WHEEL REPLACEMENT

If your scooter is equipped with pneumatic tires and you have a flat tire, you can have the tube replaced. If your scooter is equipped with a solid tire insert, either the solid insert or the entire wheel must be replaced depending on the model. Contact your authorized Pride Provider for information regarding replacement wheels for your scooter.

WARNING! Wheels on your scooter should only be serviced/replaced by an authorized Pride Provider or qualified technician.

WARNING! Completely deflate pneumatic tires before dismantling the rim or attempting repair.

WARNING! Be sure that the key is removed from the key switch and the scooter is not in freewheel mode before performing this procedure repair.

WARNING! When changing a pneumatic tire, remove only the lug nuts, then remove the wheel. If any further disassembly is required, deflate the tire completely or it may explode.

Follow these easy steps for a quick and safe repair for pneumatic tires:

1. Remove the key from the key switch.
2. Elevate the side of the scooter of which you are removing the tire. Place wooden blocks under the frame to elevate the scooter.
3. Completely deflate the tire before removing the wheel.
4. Remove the lug nuts. **See figure 20.**
5. Pull the wheel off of the axle.
6. Remove the bolts and separate the rim halves. **See figure 21.**
7. Remove the old tube from the pneumatic tire and replace it with a new tube.
8. Reassemble the rim halves. **See figure 21.**
9. Slide the wheel back onto the axle.
10. Reinstall the lug nuts and ensure they are tightened properly.
11. Remove the blocks from beneath the scooter.

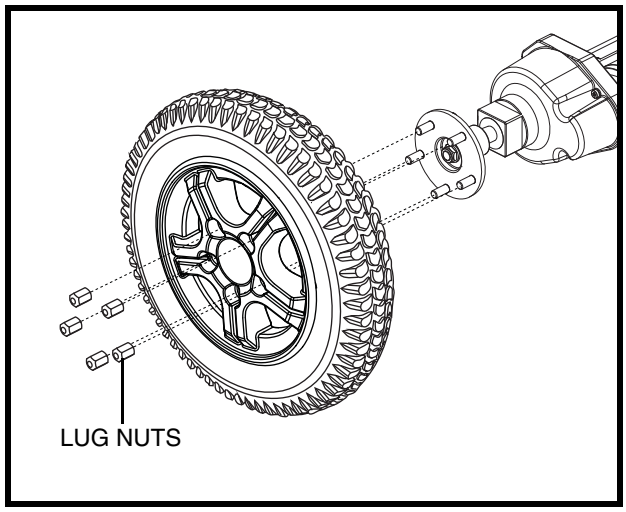

Figure 20. Drive Wheel Removal

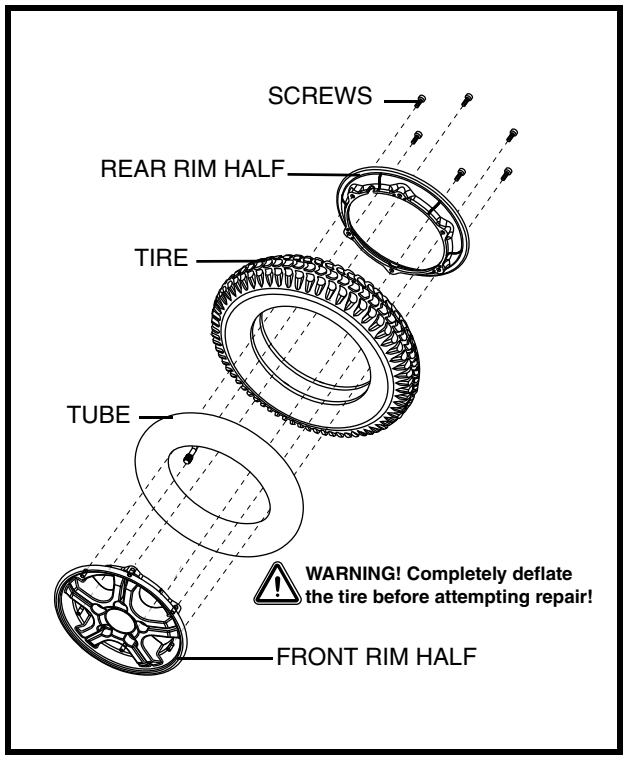

Figure. 21. Drive Wheel Assembly

VIII. CARE AND MAINTENANCE

ABS PLASTIC SHROUDS

- The front tiller shroud, front shroud, and the rear shroud are formed from durable ABS plastic and are coated with an advanced formula urethane paint.
- A light application of car wax will help the shrouds retain their high gloss.

AXLE BEARINGS AND THE MOTOR/TRANSAXLE ASSEMBLY

These items are all prelubricated, sealed, and require no subsequent lubrication.

MOTOR BRUSHES

The motor brushes are housed inside of the motor transaxle/assembly. They should be inspected periodically for wear by your authorized Pride Provider.

CONSOLE, CHARGER, AND REAR ELECTRONICS

- Keep these areas free of moisture.
- Allow these areas to dry thoroughly if they have been exposed to moisture before operating your scooter again.

FUSE REPLACEMENT

In the event a fuse should cease to work:

1. Remove the fuse by pulling it out of its slot.
2. Examine the fuse to be sure it is blown. **See figures 22 and 22A**.
3. Insert a new fuse of the same rating.

WARNING! The replacement fuse must exactly match the rating of the fuse being replaced. Failure to use properly rated fuses may cause damage to the electrical system.

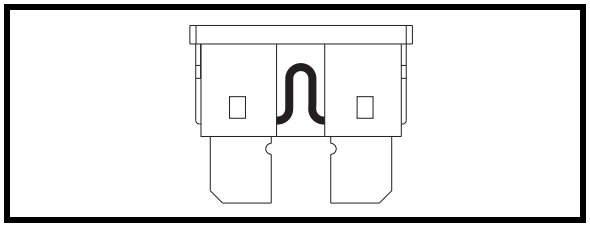

Figure 22. Working Fuse

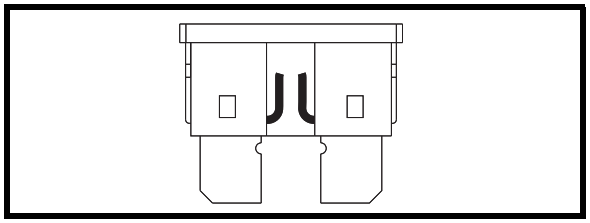

Figure 22A. Blown Fuse (Replace)

BRAKE PADS

The brake pads on your scooter should be inspected periodicly for wear. Once the pads reach 2 mm or 1/8-th of an inch in thickness, they should be replaced. All brake pads should be replaced at the same time. Contact your authorized Pride Provider for more information on replacing the brake pads.

NYLON LOCK NUT REPLACEMENT

Any nylon insert lock nut removed during the periodic maintenance, assembly, or disassembly of the scooter must be replaced with a new nut. Nylon insert lock nuts should not be reused as it may cause damage to the nylon insert, resulting in a less secure fit. Replacement nylon insert lock nuts are available at local hardware stores or through your authorized Pride Provider.

VIII. CARE AND MAINTENANCE

STORING YOUR SCOOTER

If you plan on not using your scooter for an extended period of time, it is best to:

1. Fully charge its batteries prior to storage.
2. Disconnect the batteries from the scooter.
3. Store your scooter in a warm, dry environment.
4. Avoid storing your scooter where it will be exposed to temperature extremes.

WARNING! Always protect batteries from freezing temperatures and never charge a frozen battery. Charging a frozen battery can result in damage to the battery.

Batteries that are regularly and deeply discharged, infrequently charged, stored in extreme temperatures, or stored without a full charge may be permanently damaged, causing unreliable performance and limited service life. It is recommended that you charge the scooter batteries periodically throughout periods of prolonged storage to ensure proper performance.

You may wish to place several boards under the frame of your scooter to raise it off of the ground during periods of prolonged storage. This takes the weight off the tires and reduces the possibility of flat spots developing on the areas of the tires contacting the ground.

DISPOSAL OF YOUR SCOOTER

Your scooter must be disposed of according to applicable local and national statutory regulations. Contact your local waste disposal agency or authorized Pride Provider for information on proper disposal of packaging, metal frame components, plastic components, electronics, batteries, neoprene, silicone, and polyurethane materials.

IX. WARRANTY

THREE-YEAR LIMITED WARRANTY

For three (3) years from the date of purchase, Pride will repair or replace at our option to the original purchaser, free of charge, any of the following parts found upon examination by an authorized representative of Pride to be defective in material and/or workmanship:

Structural Frame Components, Including:

- Main Frame
- Fork
- Seat Post
- Tiller Frame

THREE-YEAR PRORATA WARRANTY

Three-year prorata drivetrain warranty, including:

- Transaxle
- Motor Brake (electronic function ONLY)
- Brake

These components will be prorated on the following schedule:

- First year: 100% replacement of parts cost
- Second year: 67% replacement of parts cost
- Third year: 50% replacement of parts cost

NOTE: If there is an increase in the operational noise level in the transaxle, the warranty does not apply. An increase in operational noise level usually occurs due to abusive and excessive strain on the scooter.

ONE-YEAR LIMITED WARRANTY

For one (1) year from the date of purchase, Pride will repair or replace at our option to the original purchaser, free of charge, any of the following parts found upon examination by an authorized representative of Pride to be defective in material and/or workmanship:

- Bearings
- Bushings
- Rubber Components
- Plastic Components (except body)

Also, electronic assemblies including:

- Electronic Controllers
- Chargers
- Harnesses
- Any other electrical subassembly

SIX-MONTH WARRANTY

The battery is covered by a separate six-month warranty, provided by the battery manufacturer. The batteries are not warranted by Pride.

RECONDITIONED UNITS WARRANTY

All reconditioned units are covered by a six-month warranty from Pride effective from the date of purchase.

IX. WARRANTY

WARRANTY EXCLUSIONS

This warranty does not extend to those items which may require replacement due to normal wear and tear.

- ABS Plastic Shrouds
- Brake Pads
- Motor Brushes
- Tires and Tubes
- Upholstery and Seating
- Fuses/Bulbs
- Circumstances beyond the control of Pride
- Labor, service calls, shipping, and other charges incurred for repair of the product, unless specifically authorized, IN ADVANCE, by Pride Mobility Products Corporation
- Repairs and/or modifications made to any part without specific consent from Pride

Exclusions also include components with damage caused by:

- Contamination
- Abuse, misuse, accident, or negligence
- Battery fluid spillage or leakage
- Commercial use, or use other than normal
- Improper operation, maintenance, or storage

NOTE: Gradual deterioration in performance because the battery has been left in a discharged state, left in cold conditions for an extended period of time, or worn out through heavy use is not covered.

SERVICE CHECKS AND WARRANTY SERVICE

Warranty service must be performed by an authorized Pride Provider. Do not return faulty parts to Pride without prior written authorization. All transportation costs and shipping damage incurred while submitting parts for repair or replacement are the responsibility of the purchaser. Please contact your authorized Pride Provider for information on the current cost associated with a service visit.

There is no other express warranty.

IMPLIED WARRANTIES

Implied warranties, including those of merchantability and fitness for a particular purpose, are limited to one (1) year from the date of original purchase and to the extent permitted by law. Any and all other implied warranties are excluded. This is the exclusive remedy. Liabilities for consequential damages under any and all warranties are excluded.

Some states do not allow limitations on how long an implied warranty lasts or do not allow the exclusion or limitation of incidental or consequential damages. So, the above limitation or exclusion may not apply to you.

APPENDIX I - SPECIFICATIONS

Model Number	SC714
Obstacle Climbing Ability	5 in. (13 cm)
Overall Length[2]	56.25 in. (142.8 cm)
Overall Width[2]	27.25 in. (69.2 cm)
Total Weight	380.5 lbs. (172.59 kg)
Total Weight Without Batteries[2,5]	259.5 lbs. (117.70 kg)
Heaviest Piece When Disassembled[2]	Main frame: 205.5 lbs. (93.21 kg)
Turning Radius[2]	Variable between 82 in. (208.3 cm) and 83 in. (210.8 cm)
Speed (Maximum)[1]	8.5 mph (13.7 km/h)
Range Per Charge[1,4]	Up to 22.13 miles (35.62 km) with 75 Ah batteries Up to 29.51 miles (47.49 km) with 100 Ah batteries
Ground Clearance[2]	5.25 in. (13.33 cm)
Weight Capacity	400 lbs. (181 kg)
Standard Seating	Type: KAB Weight: 48 lbs. (21.77 kg) Material: Black Vinyl Dimensions: 18 in. (45 cm) length 18 in. (45 cm) width 18.5 in. (47 cm) height
Drive System	Rear-wheel drive, sealed transaxle, 24-volt DC motor
Dual Braking System	Regenerative and electromechanical
Tires	Type: Pneumatic Front and rear: 13 in. (33 cm)
Battery Requirements[3,6]	Two 12-volt, deep-cycle Size: Group 31 (100 Ah) or Group 24 (75 Ah) Battery weight: 100 Ah: 60.5 lbs. (27.44 kg) each 75 Ah: 55 lbs. (25 kg) each
Battery Charger	8-amp, off-board
Freewheel Lever Operational Force	69 Newton meters (50.89 foot-pound force)

1 Varies with user weight, terrain type, battery amp-hour (Ah), battery charge, battery condition and tire condition. This specification can be subject to a variance of +10%, -5%.

2 Due to manufacturing tolerances and continual product improvement, this specification can be subject to a variance of (+ or -) 3%.

3 AGM or Gel-Cell type required. See IV. “Batteries and Charging.”

4 Tested in accordance with ANSI/RESNA, WC Vol 2, Section 4 & ISO 7176-4 standards. Results derived from theoretical calculation based on battery specifications and drive system performance. Test conducted at maximum weight capacity.

5 Inludes standard seat.

6 Battery weight may vary based on manufacturer.

NOTE: This product conforms to all applicable ANSI/RESNA testing requirements and ISO 7176 series EN12184 standards. All specifications subject to change without notice.

APPENDIX I - SPECIFICATIONS

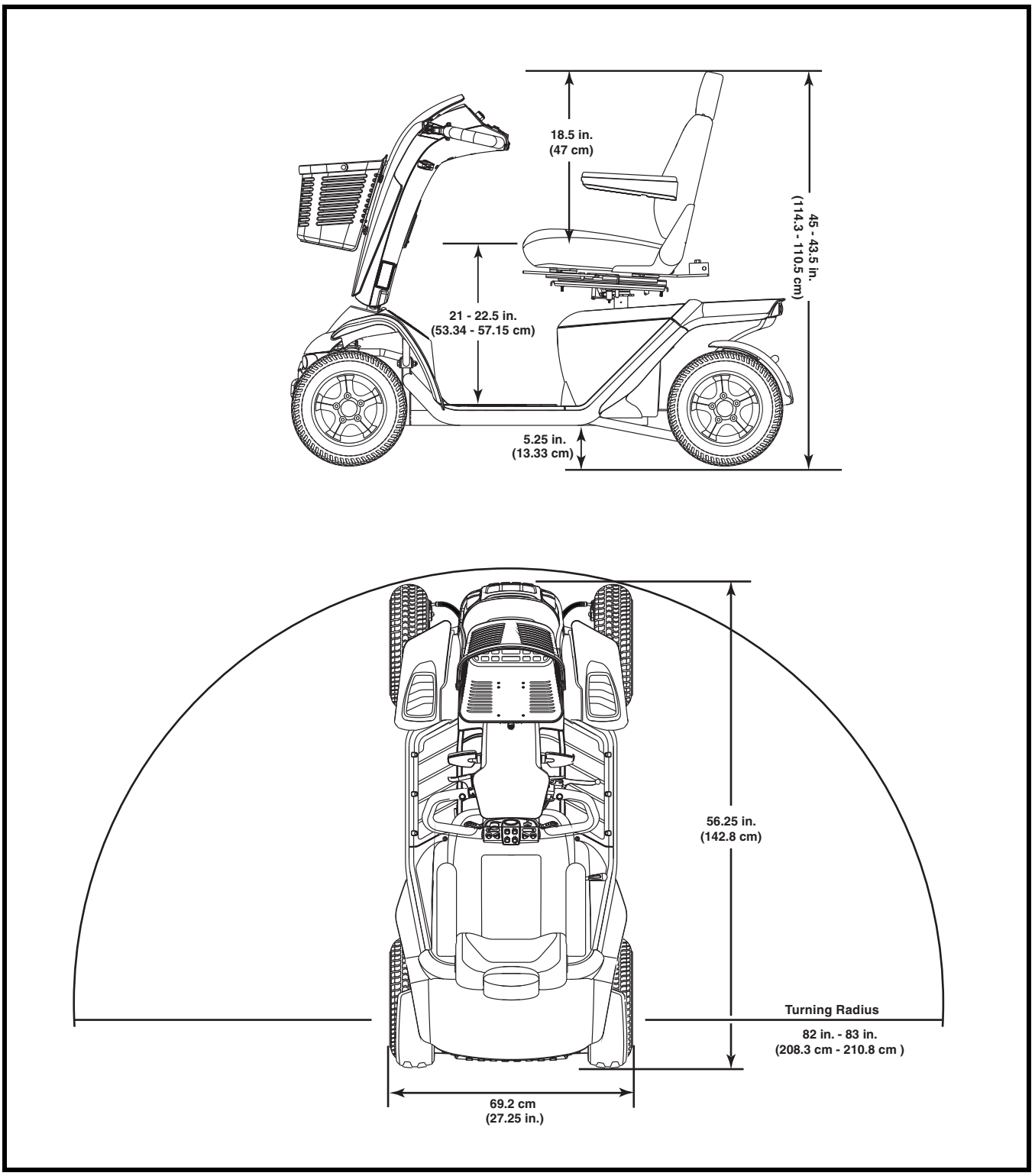

Figure 23. Dimensions

NOTES

NOTES

NOTES

Pride®
Mobility Products Corp.

182 Susquehanna Avenue
Exeter, PA 18643

www.pridemobility.com

INFMANU4049